Electric Tow Tractor

Model:
QDD45H

AC

EPS

Advantages:

- Easy operation and flexible steering, safe and reliable.
- With powerful traction, when the traction weight reaches 2000kg/4400lbs, can climb 8% slope maximum.
- Shock-proof and non-slip pedal reversible cushions in the back, reduce fatigue and ergonomic.
- The automatic power-off function works when the driver leaves the truck.
- Speed mode: manual, stepless speed.
- Equipped with warning lights.
- Sideway battery easy for replacement.

1KG=2.205LB 1INCH=25.40MM

MODEL		QDD45H
Drive type		electric
Operate type		standing
Load capacity	**Q(kg/lbs)**	**4500/9900**
Max. rated tractive force	(N)	3000
Drawbar center height	H10(mm/inch)	128/5
Axle loading, laden front/rear	kg/lbs	560/440(1233/969)
Axle loading, unladen front/rear	kg/lbs	580/420(1277/925)
Tyre size, front	mm/inch	ф250x80/10x3.1
Tyre size, rear	mm/inch	ф200x50/8x2
Additional wheels (dimensions)	mm/inch	ф127x57/5x2.2
Wheels, number front rear(x=driven wheels)		1X+2/2
Height of tiller in drive position min./max.	h14(mm/inch)	1070/1370(42/54)
Overall length	l1(mm/inch)	1450/57
Overall width	b1(mm/inch)	830/32.7
Aisle width	Ast(mm/inch)	1670/66
Turning radius	Wa(mm/inch)	1235/49
Travel speed, laden/unladen	Km/h	9/10
Battery voltage, nominal capacity K5	V/Ah	24/560
Battery weight	Kg/lbs	559/1232
Batteries dimentions(LxWxH)	mm/inch	780x335x625/30.7x13.2x24.6
Service weight (with battery)	kg/lbs	1000/2200

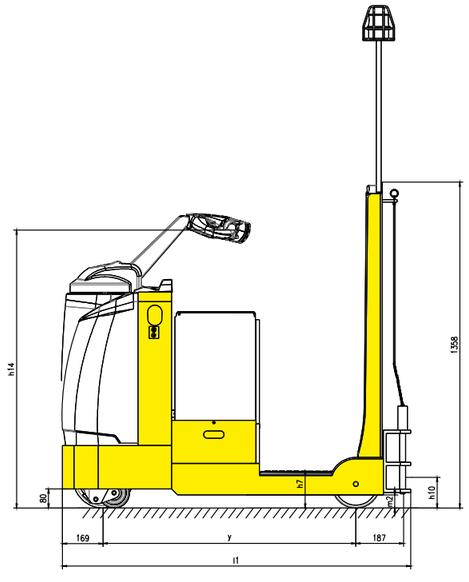

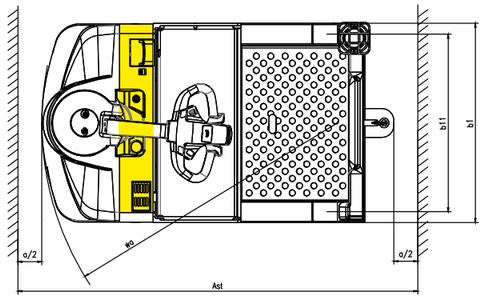

Conforms to EN ISO3691-1
EN1175-1
EN16307-1
Based on Directive 2006/42/EC